ISSN 1451-107X

TRANSPORT & LOGISTICS

11'06

TRANSPORT I LOGISTIKA
TRANSPORT & LOGISTICS

BEOGRAD 2006

The International Journal
Međunarodni časopis

ISSN 1451-107X

TRANSPORT, LOGISTICS
TRANSPORT I LOGISTIKA

Number 11, December 2006 11/06

Publishers / Izdavači:

Faculty of Mining and Geology,
Department of Haulage and Hoisting,
Belgrade, Serbia

BERG Faculty TU Košice,
Department of Logistics and
Production Systems,
Košice, Slovakia

Adress of Publishers
Adresa Izdavača:
Faculty of Mining and Geology
Department of Haulage and
Hoisting, Djušina 7,
11000 Belgrade, Serbia
tel/fax: ++381 11 3241121
E-mail: mgrujic@rgf.bg.ac.yu

BERG Faculty TU
Department of Logistics and Production Systems, Park Komenskeho 14
04200 Košice, Slovakia
tel/fax: ++421 55 6023146
E-mail: Jan.Boroska@tuke.sk

Price: 10 EUR
Cena časopisa: 800 din.

Dear readers,

Continuing their successful co-operation, University of Belgrade and Technical University of Košice have prepared and now present to you the 11th issue of TRANSPORT AND LOGISTICS. Although there have been some difficulties, mainly related to the tendency to preserve the high quality of papers, the Editorial staff has prepared this issue due to scientific papers of authors from 5 different countries.

The statement we have made in previous issue is still effective. Namely, we continue the tendency of expanding fields of research of authors. In addition to the transport in mining, other industries are also more and more involved. The authors in this issue are mechanical, mining, electric, civil, traffic and other engineers, economists, mathematicians etc.

Hereby we invite all experts and companies, engaged in the field of transport and logistics, to join us. Their participation in the creation of this journal contributes not only to the gain of all of us, but to the greatest extent to the gain of science and our profession.

Sincerely yours, Miloš Grujić

Dragi čitaoci,

Nastavljajući uspešnu saradnju između Univerziteta u Beogradu i Tehničkog univerziteta u Košicama, pripremljen je i izdaje se i 11 broj časopisa TRANSPORT I LOGISTIKA. Iako postoje određene teškoće, koje su prvenstveno vezane za tendenciju da se zadrži visok kvalitet radova, uredništvo je pripremilo ovaj broj sa radovima čiji su autori iz 5 zemalja.

Konstatacija koja je iznesena u prošlom broju i sada je aktuelna. Naime, nastavlja se trend širenja područja kojima se bave autori radova. Pored transporta u rudarstvu, sve su više zastupljene i druge grane privrede. Autori u ovom broju su mašinski, rudarski, elektro, građevinski, saobraćajni i drugi inženjeri, ekonomisti, matematičari.

I ovog puta pozivamo sve stručnjake i kompanije, koji se bave transportom i logistikom da nam se pridruže. Njihovim učešćem u kreiranju ovog časopisa, dobićemo svi, a najviše struka i nauka.

S poštovanjem Miloš Grujić

The International Journal of
TRANSPORT & LOGISTICS
Međunarodni časopis
TRANSPORT I LOGISTIKA

UDC: 622.648.2

POSSIBILITIES OF TRANSPORTATION OF HYDRO-STOWING IN THE FORM OF PASTE FOR THE PURPOSES OF BACK-FILLING THE CAVITIES IN THE MINE SASA (MACEDONIA)

MOGUĆNOSTI TRANSPORTA HIDROZASIPA U VIDU PASTE ZA POTREBE ZAPUNJAVANJA OTKOPANIH PROSTORA U RUDNIKU SASA (MAKEDONIJA)

Miloš GRUJIĆ[1], Dragan DRAŽOVIĆ[2], Nebojša KOSTOVIĆ[2], Zoran DESPODOV[3]
Faculty of Mining and Geology, Belgrade, Serbia[1]
Institute of Mining, Belgrade, Serbia[2]
Faculty of Mining and Geology, Štip, Macedonia[3]

Abstract: *The more and more expressive need for metal ores, especially for lead and zinc, brings to an increase in productivity in current mines. However, as for economic parameters even though there are prerequisites for a rentable exploitation, the application of widespread breaking methods is not always possible for technical, safety and ecological reasons. Therefore methods of back-filling the cavities are more and more frequent. For that purpose, in considerable number of cases, the existing tailings (mining and flotation) in the proximity of the mine is used. This Paper presents parameters of preparation and transport of the tailings in the form of paste to the face, on the example of the lead and zinc mine SASA.*

Key words: *hydro-stowing, tailings, transport, paste*

Apstrakt: *Sve veće potrebe za rudama metala, posebno olova i cinka, dovode do povećane proizvodnje u aktuelnim rudnicima. Međutim, iako u pogledu ekonomskih parametara postoje uslovi za isplativu eksploataciju, primena masovnih metoda sa zarušavanjem nije uvek moguća iz tehničkih, sigurnosnih i ekoloških razloga. Zbog toga se sve češće pribegava metodama sa zapunjavanjem otkopanih prostora. U tu svrhu se koristi u znatnom broju slučajeva postojeća jalovina (rudnička i flotacijska) u neposrednoj blizini rudnika. U ovom radu se daju parametri pripreme i transporta jalovine u vidu paste do otkopa na primeru rudniku olova i cinka SASA.*

Ključne reči: *hidrozasip, jalovina, transport, pasta*

1 INTRODUCTION

Over a period of time, in most mines of metallic mineral raw materials, different variants of methods of sublevel caving. However, these methods, in addition to their great advantages, have also significant disadvantages, such as

1 UVOD

U dužem vremenskom periodu u većini rudnika metaličnih mineralnih sirovina primenjivane su razne varijante metoda sa podetažnim zarušavanjem. Međutim, ove metode, pored velikih prednosti, imaju i značajne nedostatke,

highly diluted ores, low stability at faces etc. For this reason there are tendencies, wherever it is economically justified, to apply methods of back-filling (stowing) cavities. Advantages of methods with stowing are numerous, whereof the most important are: high utilization of ore matter, low ore dilution, increased stability at faces, possibilities of simultaneous multi-block mining, etc.

With regard to the fact that at every mine there is a large quantity of tailings, dumped on tailing ponds which represent a potential environmental threat, flotation tailings proved to be a suitable material for stowing. On the basis of the granulation and other properties, it is the most convenient to transport this tailings by hydraulic way. Thin mixtures of sand, flotation tailings and water (usually 1:10), are not very convenient for deposition into cavities, and therefore in the last few years, hydro-stowing in the form of paste is used more and more. Reasons for using this type of stowing are economic, ecological, geotechnical and protective (safety).

The objective of this Paper is to show possibilities of the application of transport technology of hydro-stowing in lead and zinc mine SASA. Whereas it gives universal principles of the implementation of this technology, in regard to the typicality of conditions in this mine.

2 TECHNOLOGICAL SCHEME OF PREPARATION AND TRANSPORT OF PASTE IN THE SASA MINE

The need for using the stowing method emerged in the mining district Svinja Reka at the main level XIVb. In a previous period there were some experiences in using hydro-stowing in the mining district Golema Reka, where the cyclonized sand of flotation tailings and water are used, in solid-liquid ration 60:40. These experiences and a part of equipment are used in this case.

Opting for this type of transport in the SASA Mine, in addition to general advantages, resulted from the following reasons:

- Lack of process water in summertime,
- Possibilities of utilization of sand from the old hydro-tailing pond,

kao što su visoko razblaženje rude, manja stabilnost na otkopima i dr. Zbog toga postoje tendencije da se, gde god je to ekonomski opravdano, primene metode sa zapunjavanjem (zasipavanjem) otkopanog prostora. Prednosti metoda sa zasipavanjem su brojne, a najvažnije su: visoko iskorišćenje rudne supstance, nisko razblaženje rude, povećana stabilnost na otkopima, mogućnosti istovremenog otkopavanja više otkopnih blokova itd.

S obzirom na činjenicu da na svakom rudniku postoje velike količine jalovine, deponovane na jalovištima koja predstavljaju potencijalnu opasnost po životnu sredinu, kao veoma pogodan materijal za zasip se koristi flotacijska jalovina. Na osnovu granulacije i drugih osobina ovu jalovinu je najpovoljnije transportovati hidrauličkim putem. Retke mešavine peska flotacijske jalovine i vode (uobičajeno 1:10), nisu najpovoljnije za odlaganje u otkopane prostore, pa se poslednjih godina primenjuju sve više hidrozasipi u vidu paste. Razlozi za primenu ovog vida zasipa su ekonomski, ekološki, geotehnički i sigurnosni.

Cilj ovog rada je da ukaže na mogućnosti primene tehnologije transporta hidrozasipa u vidu paste u rudniku olova i cinka SASA. Pri tome se, daju univerzalni principi za primenu ove tehnologije, s obzirom na tipičnost uslova koji vladaju u ovom rudniku.

2 TEHNOLOŠKA ŠEMA PRIPREME I TRANSPORTA PASTE U RUDNIKU SASA

Potreba za primenu metode sa zasipavanjem se javlja u reviru Svinja Reka na osnovnom horizontu XIVb. U ranijem periodu postojala su iskustva sa korišćenjem hidrozasipa u reviru Golema Reka, gde je korišćen ciklonirani pesak flotacijske jalovine i voda u odnosu čvrstog i tečnog 60:40. Iskustva i deo opreme se koristi u ovom slučaju.

Opredeljenje za ovaj vid transporta u rudniku SASA, pored opštih prednosti, proističe i iz sledećih razloga:

- nedostatak tehničke vode u letnjim mesecima,
- mogućnosti iskorišćenja peska sa starog hidrojalovišta,

- Clearing the space for dumping recent quantity of flotation tailings,
- Shorter time period for strengthening hydro-stowing at faces and decrease of the quantity of drainage waters,
- Possibilities for application of the existing unit for hydro-stowing used for the mining district Golema Reka.

When selecting the proper solution, three variants were considered:

1. Preparation of paste solely from the old tailings at an abandoned tailing pond,
2. Preparation of paste at tailing pond itself and transport by truck-mixers to the pumping station located in the most convenient place for maximum usage of the gravitation and for shortening the route of paste transport,
3. Hydro-stowing with cyclone sand by means of the existing technology of setting up a new system for hydro-transport to the face.

Hydro-stowing paste consists of cyclonized sand of the flotation tailings, sand from an old flotation tailing pond, cement and water. Technological layout of the process of paste preparation is shown in the Figure 1. The basic parameters of this process shown in this Figure are the following:

- oslobađanje prostora za deponovanje novih količina flotacijske jalovine,
- kraće vreme potrebno za očvršćavanje hidrozasipa na otkopima i smanjenje količina drenažnih voda,
- mogućnosti primene postojeće stanice za hidrozasip koja je korišćena za revir Golema Reka.

Pri izboru rešenja razmatrane su tri varijante:

1. priprema paste samo od stare jalovine sa napuštenog jalovišta,
2. priprema paste na samom jalovištu i transport kamionima-mikserima do pumpne stanice locirane na najpogodnijem mestu za maksimalno korišćenje gravitacije i skraćenja trase za transport paste,
3. hidrozasipavanje peskom ciklona postojećom tehnologijom sa postavljanjem novog sistema za hidrotransport do otkopa.

Pasta za hidrozasip se sastoji od cikloniranog peska flotacijske jalovine, peska sa starog flotacijskog jalovišta, cementa i vode. Tehnološka šema procesa za pripremu paste data je na slici 1. Osnovni parametri ovog procesa prikazanog na ovoj slici su sledeći:

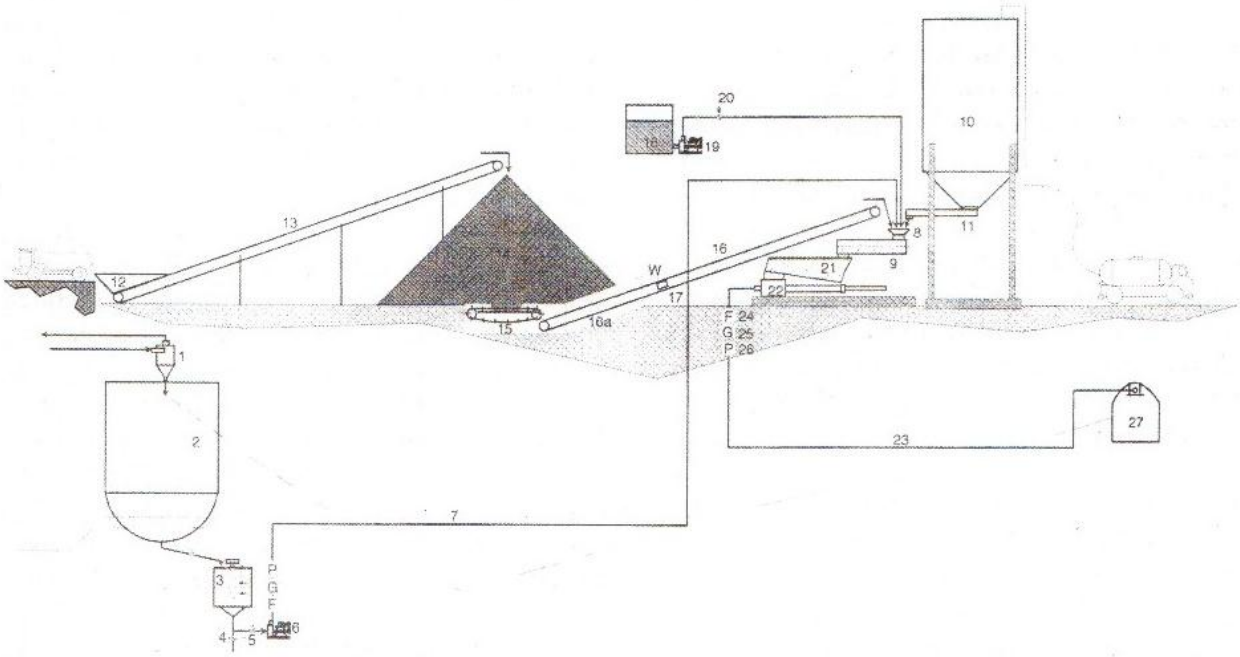

Figure 1 Technological layout of the process of paste preparation
slika 1 Tehnološka šema procesa za pripremu paste

1. hydro-cyclone, 2. Hydro-cyclone sand container, 3. Conditioner (conditioning tank), 4,5. Oval gate valve, 6. Centrifugal mud (slime) pump, 7. Pipeline of hydro-cyclone sand, 8. Reception cage for paste components, 9. Mixer for paste preparation, 10. Cement silo, 11. Worm feeder, 12. Filling cage for the additional material, 13,16. Belt conveyor, 14. Open stock of additional material, 15. Scraper (chain) conveyor, 16a. Tunnel station, 17. Belt weigher, 18. Supplementary water reservoir, 19. Water pump, 20. Electro-power valve, 21. Jumbo mixer-box of piston-pump, 22. Piston-pump, 23. High pressure pipeline, 24. Flow meter, 25. Density gauge, 26. pressure gauge, 27. Entry to gallery XIVb

Flotation tailings pulp is transported by the existing centrifugal mud pump and by the pipeline to the hydro-cyclone battery (1), which are located on the container (2). Hydro-cyclone sand, in which the mass concentration of the solid phase is equal 75%, goes gravitationally to the container and the overflow by the existing system to tailing ponds.

Container discharge is made in one shift in such a manner that water is brought to it through 6 lateral connectors (socket joint). After flapping the solid phase, a regulating valve at the pipeline is opened for discharging container into the conditioner (3). The pulp in the conditioner is equal 60% with the mass concentration of the solid phase, and the existing system enables regulation of the mass concentration and the pulp flow to the conditioner by means of measuring the container level. At the bottom of the conditioner there are three derivatives which link up into a vertical pipe which takes the pulp from the conditioner into reception (receiving) case of gravity transport up to the discharge point of hydro-stowing in the mining district Golema Reka.

At the vertical pipe, a T-derivative is installed, a suction pipeline of the horizontal mud pump (6), which transports the pulp from conditioner by a steel pipeline (7) to the paste preparation plant. At the vertical pipe, as well as at the pump inlet (suction), two oval gate valves with hand drive are installed, and by manipulating them the pulp is directed into the existing hydro-stowing system or into the pump. The pipeline is installed in a covered channel; the pipeline leads to the paste preparation plant through a route passing under the road by the river-side and constantly inclined which leads to the paste preparation plant. Along the pipeline route expansion loops and outlets for

1. hidrociklon, 2. kontejner peska hidrociklona, 3. kondicioner, 4,5. ovalni zasun, 6. centrifugalna muljna pumpa, 7. cevovod peska hidrociklona, 8. prihvatni koš komponenti paste, 9. mikser za pripremu paste, 10. silos za cement, 11. pužni dodavač, 12. usipni koš dodatnog materijala, 13,16. transportna traka, 14. otvoreni sklad dodatnog materijala, 15. grabuljasti transporter, 16a. tunelska stanica, 17. tračna vaga, 18. rezevoar za dodatnu vodu, 19. pumpa za vodu, 20. venti sa elektropogonom, 21. Jumbo mikser-sanduk klipne pumpe, 22. klipna pumpa, 23. cevovod visokog pritiska, 24. merač protoka, 25. merač gustine, 26. merač pritiska, 27. ulaz u potkop XIVb

Pulpa flotacijske jalovine transportuje se postojećom centrifugalnom muljnom pumpom i cevovodom do baterije hidrociklona (1), koje su locirane na kontejneru (2). Pesak hidrociklona, u kojem je masena koncentracija čvrste faze 75%, gravitacijski odlazi u kontejner, a preliv postojećim sistemom na jalovište.

Pražnjenje kontejnera se vrši u jednoj smeni tako što se u njega dovodi voda u 6 bočnih priključaka. Nakon uzburkavanja čvrste faze, otvara se regulacioni ventil na cevovodu za pražnjene kontejnera u kondicioner (3). Pulpa u kondicioneru je sa masenom koncentracijom čvrste faze od 60%, a postojeći sistem omogućava regulaciju masene koncentracije i protoka pulpe do kondicionera preko merenja nivoa u kondicioneru. Na dnu kondicionera nalaze se tri izvoda koja se spajaju u vertikalnu cev koja vodi pulpu iz kondicionera u prijemni koš gravitacijskog transporta do istakačkog mesta hidrozasipanja u reviru Golema Reka.

Na vertikalnoj cevi postavlja se T izvod, usisni cevovod horizontalne centrifugalne muljne pumpe (6), koja pulpu iz kondicionera transportuje čeličnim cevovodom (7) do postrojenja za pripremu paste. Na vertikalnoj cevi, kao i na usisu pumpe, postavljena su dva ovalna zasuna sa ručnim pogonom, a manipulacijom sa njima se pulpa usmerava u postojeći sistem hidrozasipa ili u pumpu. Cevovod se postavlja u pokriveni kanal i trasom, koja prolazi ispod saobraćajnice po obali potoka i pod stalnim usponom, vodi do postrojenja za pripremu paste. Duž trase cevovoda se postavljaju temperaturni kompenzatori i otvori za

pipeline drainage are installed. In terms of the automatic control process regulation, appropriate measuring devices are installed at the pipeline: flow meter, pulp density gauge and pipeline pressure gauge.

A pipeline end is at the reception cage (8) of the pulp preparation mixer (9). The mixer is with electromotive power, two-axial with ploughs for mixing (blending) and transport of the pulp through the device. Since the mass concentration of solid matter in the paste amounts to 75%, it has been anticipated rather dry material to be added until needed consistency is achieved, as well as cement as a binding agent in minimal required quantity. For the purposed of the paste preparation, the cement is transported in tankers, equipped for pneumatic discharge into the silo with cement (10). Discharge and dosage of cement is made by worm feeder (11), with frequency regulation of the number of revolutions.

Tailings from the old, the nearest tailing pond are anticipated to be used as additional material. The tailings will be transported by dump trucks and unloaded into the reception cage (12) of an inclined belt conveyor (13), through which the tailings will be transported to the open stock (14). Dosage of the tailings is made by means of a scraper conveyor as a feeder (15). Moisture content in the tailings determines the mass ratio between components in the paste. The tailings are further discharged on the inclined belt conveyor (16), where a belt weigher is located (17).

After the process of mixing all components in the mixer, the paste is discharged into the reception box of a piston-pump (21), in which the mixing scenario is programmed with a view to maintain two cylinders (22), which transports the paste by a high-pressure pipeline (23) through the gallery XIVb and then to the discharge point at the face. For any disturbance in hydro-transport additional water is anticipated for diluting the reservoir paste (18) and such water, by means of the water pump, is introduced into the mixer for paste preparation through the pipeline. The flow regulation is made through a regulation valve with the electromotive power.

For determining parameters for the paste preparation process in the plant, diagrams of movement of masses are made (Table 1). Such diagrams have been made for cases where moisture content in the old tailings is 5, 10 and 15%.

dreniranje cevovoda. U funkciji regulacije procesa automatskog upravljanja na cevovodu se instaliraju odgovarajući merni uređaji: merač protoka, merač gustine pulpe i merač pritiska u cevovodu.

Kraj cevovoda nalazi se na prijemnom košu (8) miksera za pripremu pulpe (9). Mikser je sa elektromotornim pogonom, dvoosovinski sa plugovima za mešanje i transport paste kroz uređaj. Pošto masena koncentracija čvrstog u pasti iznosi 75%, predviđeno je dodavanje suvljeg materijala do ostvarivanja potrebne konzistencije, kao i cementa za vezivo u minimalnoj potrebnoj količini. Cement se za potrebe pripreme paste dovozi u kamionima cisternama, opremljenim za pneumatsko pražnjenje u silos cementa (10). Pražnjenje i doziranje cementa u postrojenje se vrši pužnim dodavačem (11), sa frekventnom regulacijom broja obrtaja.

Kao dodatni materijal je predviđena jalovina sa starog, najbližeg, jalovišta. Jalovina će se dopremati kamionima-kiperima i istovaraće se u prijemni koš (12) kosog transportera sa trakom (13), preko koga će ova jalovina da se transportuje na otvoreni sklad (14). Doziranje jalovine se vrši grabuljastim transporterom kao dodavačem (15). Sadržaj vlage u jalovini određuje međusobni maseni odnos komponenti u pasti. Jalovina se dalje prazni na kosi transporter sa trakom (16), na kome se nalazi tračna vaga (17).

Nakon procesa mešanja svih komponenti u mikseru, pasta se prazni u prijemni sanduk klipne pumpe (21), u kome je programiran scenario mešanja u cilju održavanja homogenosti pripremljene paste. Iz ovog miksera pasta se prazni pomoću klipne pumpe sa dva cilindra (22) koja pastu transportuje visokopritisnim cevovodom (23) kroz potkop XIVb i dalje do istakačkog mesta na otkopu. Za eventualne poremećaje u hidrotransportu predviđa se dodatna voda za razređivanje paste iz rezervoara (18), koja se, pomoću pumpe za vodu (19), cevovodom uvodi u mikser za pripremu paste. Regulacija protoka se vrši preko regulacionog ventila sa elektromotornim pogonom.

Za utvrđivanje parametara za proces pripreme paste u postrojenju rađene su šeme kretanja masa (tabela 1). Ovakve šeme su urađene za slučajeve kad je sadržaj vlage u staroj jalovini 5, 10 i 15%.

Table 1 Diagrams of movement of masses for mine SASA
Tabela 1 Šema kretanja masa za rudnik SASA

Container	
Q	50.00
γč	3.20
Vč	15.63
Cm	0.75
Vv	16.67
Vp	32.29
Mp	66.67
γp	2.0645

Flood water	
Q	--
γ	1.00
Vč	--
Cm	--
Vv	16.67
Vp	--
Mp	--
γp	1.00

Mud pump	
Q	50.00
γč	3.20
Vč	15.63
Cm	0.60
Vv	33.33
Vp	48.96
Mp	83.33
γp	1.7021

Old tailings	
Q	85.00
γč	2.80
Vč	30.36
Cm	0.85
Vv	15.00
Vp	45.36
Mp	100.00
γp	2.20

Cement	
Q	6.75
γč	3.70
Vč	1.82
Cm	1.00
Vv	-
Vp	-
Mp	-
γp	-

Paste	
Q	141.75
γč	2.97
Vč	47.81
Cm	0.75
Vv	48.33
Vp	96.14
Mp	190.08
γp	1.98

LEGEND

Capacity	$Q - t/h$
Density of the solid part	$\gamma_č - t/m^3$
Volume of the solid part	$V_č - m^3/h$
Mass concentration	C_m – *do 1*
Water volume	$V_v - m^3/h$
Pulp volume	$V_p - m^3/h$
Pulp mass	$M_p - t/h$
Pulp density	$\gamma_p - t/m^3$

In the Table 1 values for moisture content of 5% are shown, and similar tables are made for other cases as well. Depending on the moisture content, other parameters of paste preparation and transport are defined.

LEGENDA

Kapacitet	$Q - t/h$
Gustina čvrstog dela	$\gamma_č - t/m^3$
Zapremina čvrstog dela	$V_č - m^3/h$
Masena koncentracija	C_m – *do 1*
Zapremina vode	$V_v - m^3/h$
Zapremina pulpe	$V_p - m^3/h$
Masa pupe	$M_p - t/h$
Gustina pulpe	$\gamma_p - t/m^3$

U tabeli 1 su date vrednosti za sadržaj vlage od 5%, a slične tabele su urađene i za ostale slučajeve. U zavisnosti od sadržaja vlage su utvrđivani i drugi parametri pripreme i transporta paste.

3 PARAMETERS OF EQUIPMENT FOR TRANSPORT OF HYDRO-STOWING

On the basis of the technological scheme of paste preparation and transport for back-filling the cavities in the mining district Svinja Reka, equipment which enables reliable process of hydro-stowing transport was chosen. At that, the existing equipment was used to the greatest degree for hydro-stowing in the mining district Golema Reka.

In general, transport of the material in this process is divided into three phases:

1. transport of the flotation tailings from a container at the flotation to the paste preparation plant (route length 550 m, geodetic height of pumping 26 m),
2. conveyance of the old tailings to the paste preparation plant (route length 850 m, difference in height 42 m),
3. Transport of the paste from the plant to the face in the Block 1 (route length 1810 m, average difference in height 20 m).

On the basis of the calculations and specifying influential factors, the following parameters of the system for sand conveyance from a hydro-cyclone to paste preparation plant:

Pipeline	Φ108x5.6 mm
Speed in pipeline	1.85 m/s
Terminal speed	1.80 m/s
Adjusted terminal speed	1.84 m/s
Total decline of pressure in the pipeline turned to clear water	82.07 m
Required power of electric motor for the pump	43.47 m
Flow of the selected mud pump	49 m^3/h
Thrust of pump	82 mvs
Number of revolutions of the pump	1300 min^{-1}

Conveyance of tailings from an old flotation tailing pond to a paste preparation plant is made by dump truck and these are the characteristics of this system:

Max. tonnage of a truck	15.2 t
Volume of a truck case	10 m^3
Min. radius of a truck	19.84 m
Engine capacity	206 kW
Required number of cycles	41
Required number of trucks	3

3 PARAMETRI OPREME ZA TRANSPORT HIDROZASIPA

Na osnovu tehnološke šeme pripreme i transporta paste za zapunjavanje otkopanog prostora u reviru Svinja Reka, izabrana je oprema koja će omogućiti pouzdan proces transporta hidrozasipa. Pri tome je maksimalno korišćena postojeća oprema za hidrozasipavanje u reviru Golema Reka.

U opštem slučaju transport materijala u ovom procesu se može podeliti u tri celine:

1. transport flotacijske jalovine od kontejera kod flotacije do postrojenja za pripremu paste (dužina trase 550 m, geodetska visina pumpanja 26 m),
2. doprema stare jalovine kamionima do postrojenja za pripremu paste (dužina trase 850 m, visinska razlika 42 m),
3. transport paste od postrojenja do otkopa u Bloku 1 (dužina trase 1810 m, srednja visinska razlika 20 m).

Na osnovu proračuna i određivanja uticajnih faktora, dobijeni su sledeći parametri sistema za dopremu peska od hidrociklona do postrojenja za pripremu paste:

Cevovod	Φ108x5,6 mm
Brzina u cevovodu	1,85 m/s
Kritična brzina	1,80 m/s
Korigovana kritična brzina	1,84 m/s
Ukupan pad pritiska u cevovodu Preveden na čistu vodu	82,07 m
Potrebna snaga elektomotora za pumpu	43,47 m
Protok izabrane muljne pumpe	49 m^3/h
Napor pumpe	82 mvs
Broj obrtaja pumpe	1300 min^{-1}

Doprema jalovine sa starog flotacijskog jalovišta do postrojenja za pripremu paste se vrši kamionima kiperima i ovaj sistem ima sledeće karakteristike:

maksimalna nosivost kamiona	15,2 t
zapremina sanduka kamiona	10 m^3
minimalni radijus kamiona	19,84 m
snaga motora	206 kW
potreban broj ciklusa	41
potreban broj kamiona	3

The existing roads in mine area are used for truck motion. Trucks are loaded by means of the existing loaders owned by the SASA Mine.

Paste is transported, from the preparation plant to the face, through plastic pipeline under high pressure. A high pressure piston-pump is used for moving the paste. The main characteristics of this part of the conveyance system are:

Length of the external part of the pipeline	70 m
Length of the underground part of the pipeline up to the Block 1	1,740 m
Pipeline diameter	150 mm
Pump working capacity	100 m^3/h
Maximum pressure	110 bar
Engine capacity of the pump	120 kW

The pipeline in its external part is installed on low pillars of different height. Because of low temperature in winter, thermo-isolation is made in the part outside the underground galleries, in order to prevent negative effect of frost on the paste. In the gallery XIVb the pipeline is installed in the roof of adit on supports for compressed air and water (Figure 2).

Za kretanje kamiona koriste se postojeći putevi u krugu rudnika. Utovar kamiona se vrši uz pomoć postojećih utovarača koje rudnik SASA poseduje.

Pasta se od postrojenja za pripremu do otkopa transportuje plastičnim cevovodom pod visokim pritiskom. Za kretanje paste koristi se klipna pumpa sa visokim pritiskom. Osnovne karakteristike ovog dela transportnog sistema su:

dužina spoljašnjeg dela cevovoda	70 m
dužina podzemnog dela cevovoda do Bloka 1	1.740 m
prečnik cevovoda	150 mm
radni kapacitet pumpe	100 m^3/h
maksimalan pritisak	110 bar
snaga motora pumpe	120 kW

Cevovod u spoljašnjem delu postavlja na niskim stubovima različite visine. Zbog niskih temperatura u zimskom periodu u delu koji se nalazi van podzemnih prostorija, vrši se termoizolacija kako bi se sprečio negativan uticaj mrazeva na pastu. U potkopu XIVb cevovod se postavlja u krovu potkopa na nosače za komprimovan vazduh i vodu (slika 2).

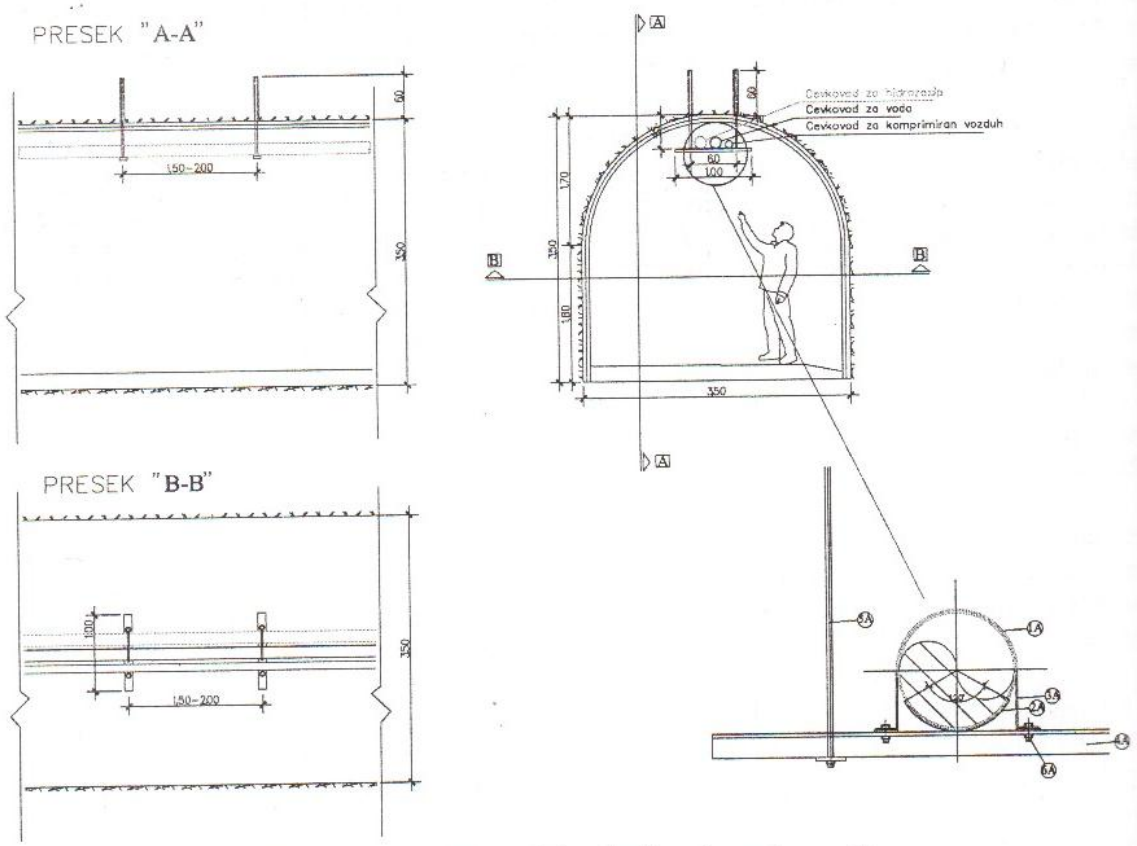

Figure 2 Installation of the pipeline through an adit
slika 2 Postavljanje cevovoda kroz potkop

Pipeline for the purposes of back-filling the face with paste, successively with floor advance of 3.5 m height, conducts along with ramp which is built in the floor part of the mineralization. Further transmission is made through access tunnels to the face, in the lateral part of the tunnel.

4 CONCLUSION

A need for mass mining of deposit of metallic raw materials and for maximum usage of ore substance brought to that the application of hydro-stowing in the form of paste became very popular. The use of this process is justified to a great extent due to protecting, ecological and economic reasons. Experience obtained in lead and zinc Mine SASA may be of great value, considering one single deposit is in question, which is typical for lead and zinc ores.

Cevovod za potrebe zapunjavanja otkopa pastom, sukcesivno sa napredovanjem etaža čija visina iznosi 3,5 m, se dalje vodi uz otkopnu rampu koja se radi u podinskom delu orudnjenja. Dalje razvođenje se vrši kroz pristupne hodnike do otkopa i to u boku prostorije.

4 CONCLUSION

Potrebe za masovnim otkopavanjem ležišta metaličnih mineralnih sirovina i maksimalnim iskorišćenjem rudne supstance doveli su do toga da je primena hidrozasipa u vidu paste postala veoma aktuelna. Primena ovog procesa ima veoma veliko opravdanje iz sigurnosnih, ekoloških i ekonomskih razloga. Iskustva koja se dobijaju u rudniku olova i cinka SASA mogu biti dragocena s obzirom na to da se radi o jednom ležištu koje je tipsko za rude olova i cinka.

REFERENCES / LITERATURA

[1] Dražović, D., Kostović, N., Stjepanović, P. *Development and implementation of contemporary technologies of conveyance and deposition of ash in Thermal Power Plant Nikola Tesla - Obrenovac in the form of thick mixture.* Collection of works MEP 03, Vrdnik, 2003.

[2] Grujić, M.: *Conveyance of intermediate goods and transport of workers in mines.* Faculty of Mining and Geology, Belgrade, 1995.

[4] Grujić, M., Despodov, Z., et al: *Additional mining project of preparation and conveyance of hydro-stowing from back-filling station to the horizon XIVb in the lead and zinc mine SASA.* Faculty of Mining and Geology, Štip, 2006.

[3] Ristović, I., Jacović, J.: *Definisanje osnovnih uslova primene kontinualnog transporta u rudnicima metaličnih mineralnih sirovina.* p.p. 105-109, V internacionalni simpozijum o transportu i izvozu, Vrdnik, 2002.

Reviewal / Recenzija: Prof. Ing. Jan Boroška CSc